CHANNEL VISION™

IR-4101 Users Guide

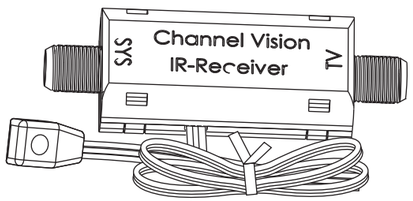

CHANNEL VISION
Limited Warranty

Channel Vision Technology will repair or replace any defect in material or workmanship which occurs during normal use of this product with new or rebuilt parts, free of charge in the USA, for two years from the date of original purchase. This is a no hassle warranty with no mail in warranty card needed. This warranty does not cover damages in shipment, failures caused by other products not supplied by Channel Vision Technology, or failures due to accident, misuse, abuse, or alteration of the equipment. This warranty is extended only to the original purchaser, and a purchase receipt, invoice, or other proof of original purchase date will be required before warranty repairs are provided.

Mail in service can be obtained during the warranty period by calling (800) 840-0288 toll free. A Return Authorization number must be obtained in advance and can be marked on the outside of the shipping carton.

This warranty gives you specific legal rights and you may have other rights (which vary from state to state). If a problem with this product develops during or after the warranty period, please contact Channel Vision Technology, your dealer or any factory-authorized service center.

500-167 rev B

The IR-4101 includes these items:

The **IR-4101** is an IR coax adaptor that works with Channel Vision's IR coax engine to enable the transmission of Infrared remote control signals onto the same coax cable that delivers your cable TV. Channel Vision's IR coax engine can be found in the following products: IR-4000, E2200IR, E3200IR, E4200IR, and P-0321.

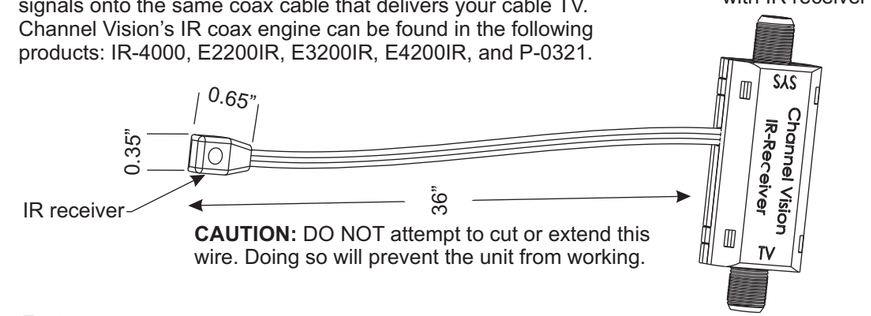

CAUTION: DO NOT attempt to cut or extend this wire. Doing so will prevent the unit from working.

Features:
- Plasma Proof IR receiver
- Compatible with: IR-4000, E2200IR, E3200IR, E4200IR, & P-0321
- Versatile mounting accessaries: Install as
  - Very small receiver
  - In-cabinet tube type receiver
  - Unobtrusive desktop type receiver

Accessories

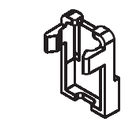

1 - IR receiver holster

1 - hole mount

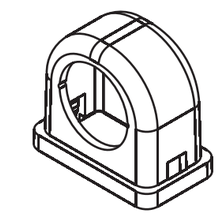

1 - tabletop mount

How IR repeating works

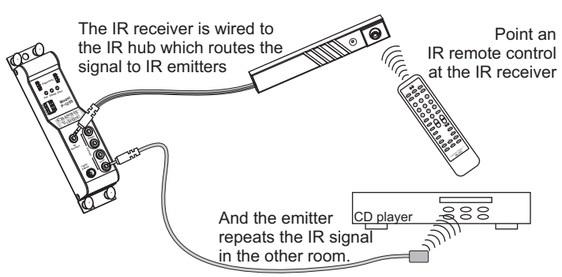

Be sure the emitter is attached directly over the component's IR receiver. To locate the IR receiver, shine a flashlight into the unit and look for the sensor.

Specifications: (typical)

Voltage Requirements:	8 - 12 VDC
IR Freq. range supported:	30 kHz - 60 kHz
IR pickup range:	40 ft. @ 38kHz, 25 ft. @ 56kHz
IR receiver head dimensions:	0.65" x 0.35" x 0.25"
Max coax length:	200ft.*
Color:	Black

*Longer runs may still function but are not recommended. The IR signal will not pass through most RF amplifiers.

Specifications subject to change without notice.

Directivity of IR Sensor

The effective receive distance of all IR receivers changes when the IR remote control is not directly in front of the IR sensor.

The graph below describes the performance of the IR sensor device used in this Channel Vision IR receiver. Please note that the graph below marks the distance as a percentage of the maximum distance. So at 0º, the distance is 1.0 (or 100%) and at 30º, the distance is 0.7 (or 70%) and so on.

Actual transmission distances are dependent upon frequency of remote control (40kHz has max range) and luminosity of remote control (i.e. Some remotes are brighter than others.)

Under ideal conditions, ranges of >40 feet are possible.

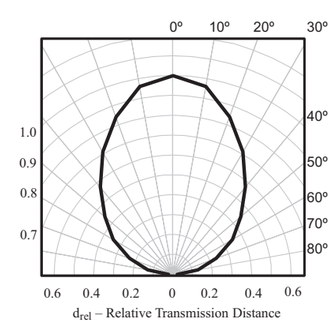

Using the IR-4101 & P-0321

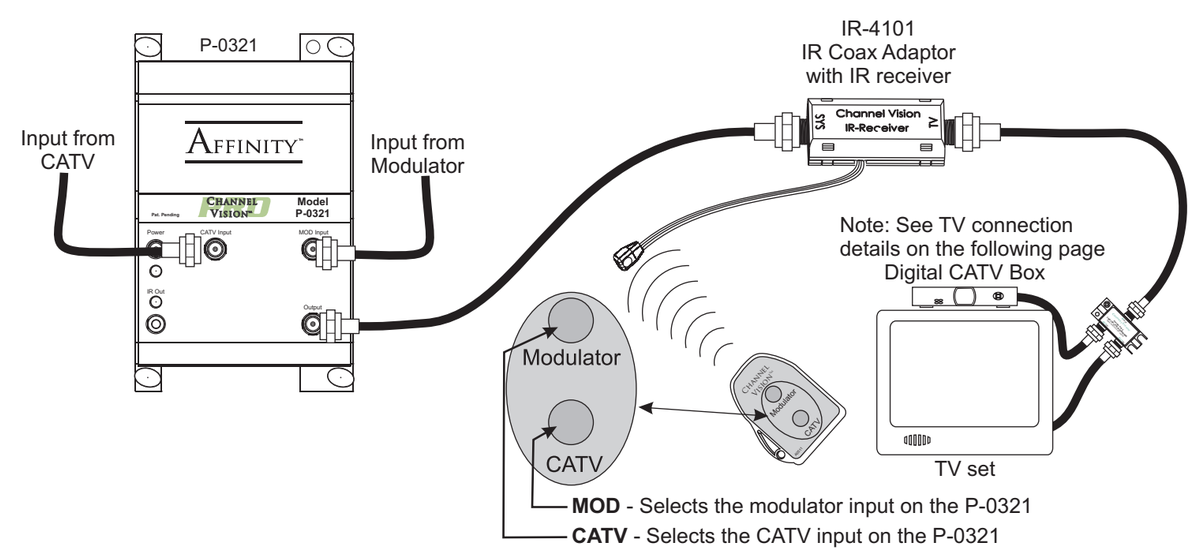

Basic IR-on-coax Setup

A basic IR system, like the one shown below, is often used when an audio/video signal is distributed to a remote TV location using the RF output of the device. The IR-4101 is located near the TV, allowing IR signals to be detected, and the IR-4000 is located near the audio/video source, providing an IR emitter output.

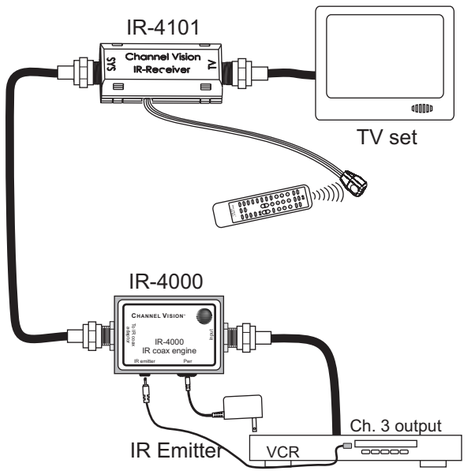

Using the IR-4101 with an E-series IR modulator

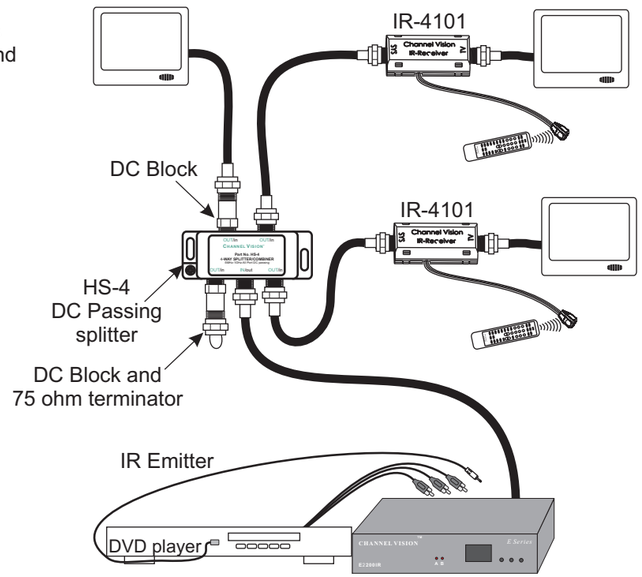

Mounting the IR receiver: Option 1 - Using the holster

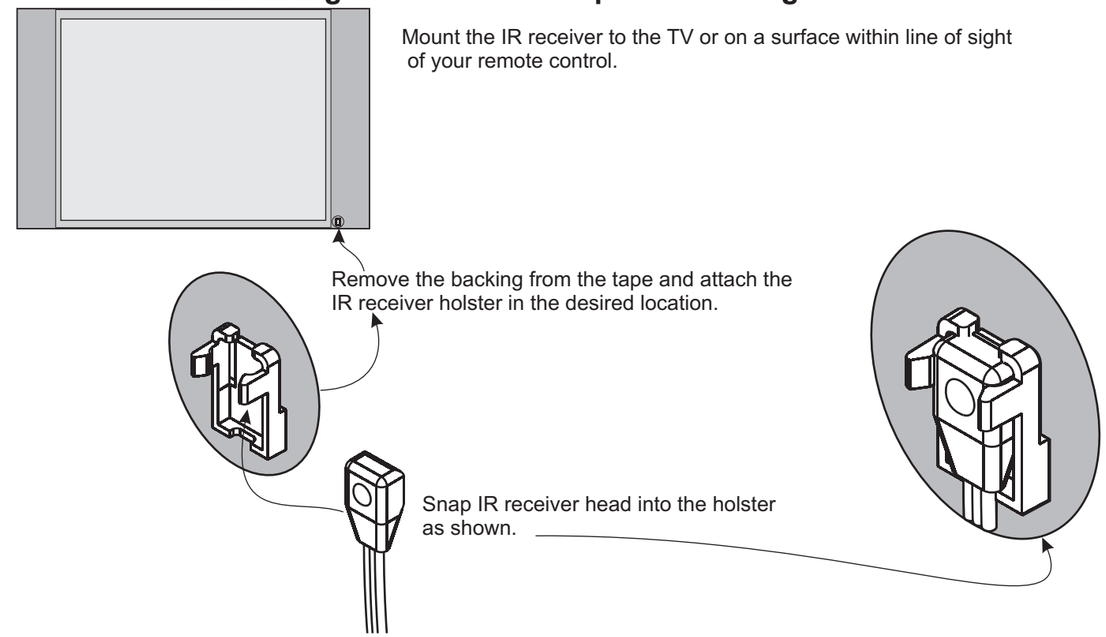

Mounting the IR receiver: Option 2 - Using the hole mount

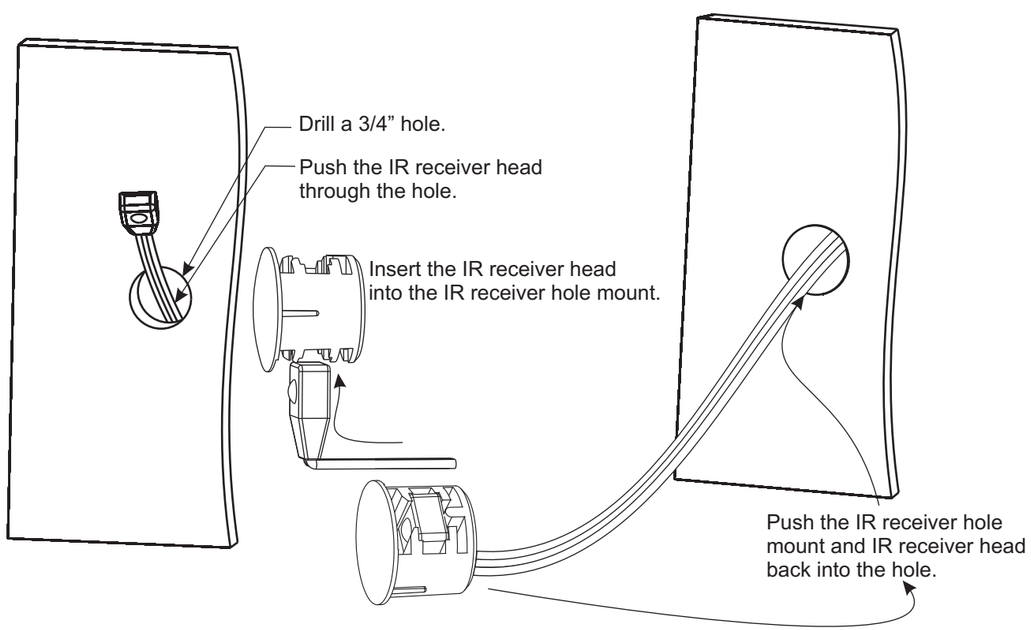
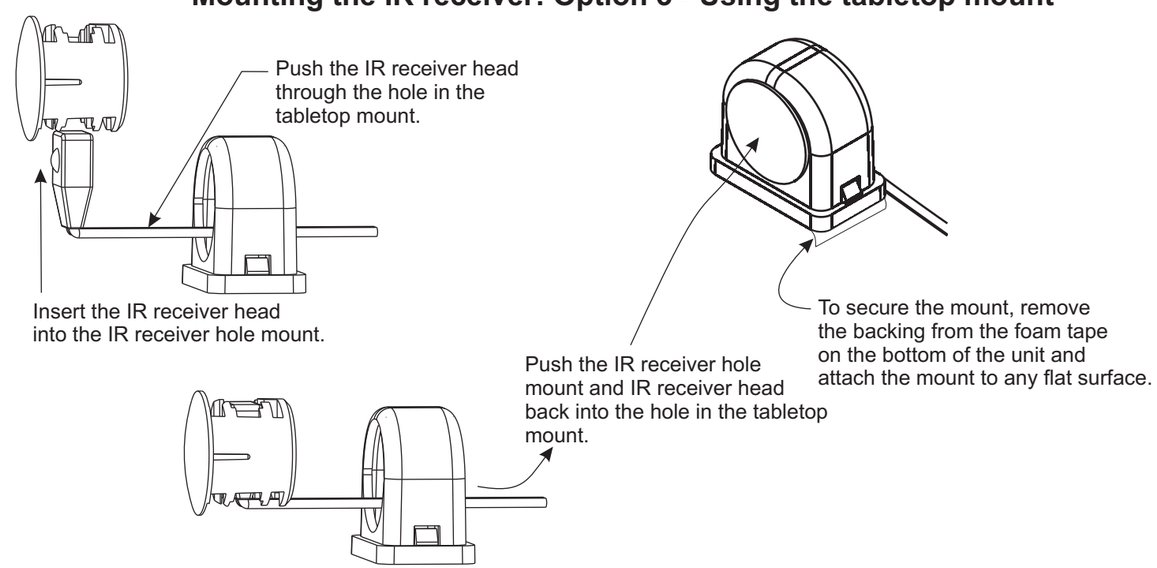
Mounting the IR receiver: Option 3 - Using the tabletop mount